Menu Tree

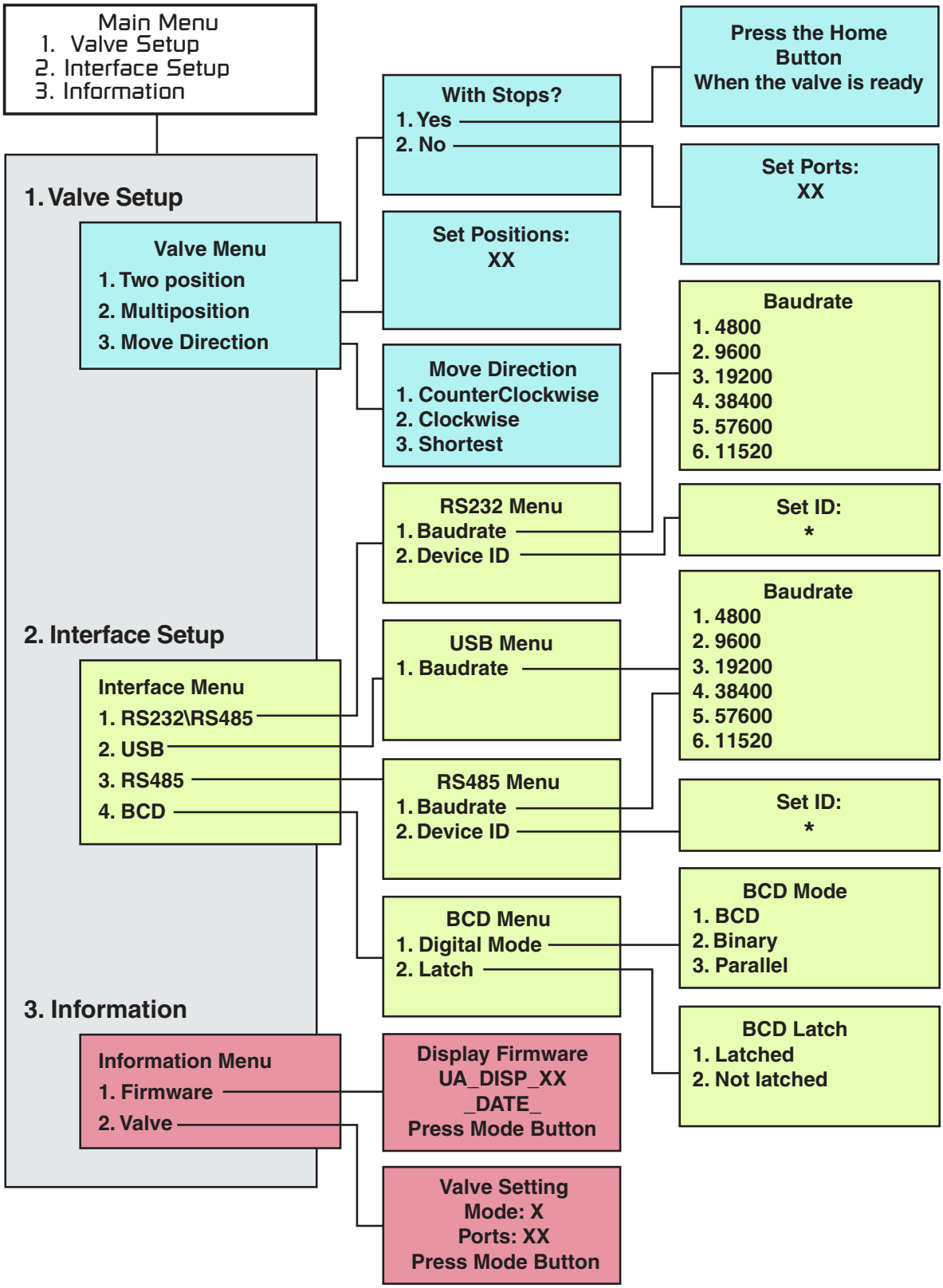

CHROMalytic +61(0)3 9762 2034
TECHnology Pty Ltd
Australian Distributors
Importers & Manufacurers
www.chromtech.net.au
12/13
Website NEW : www.chromalytic.com.au E-mail : info@chromtech.net.au Tel: 03 9762 2034 . . . in AUSTRALIA