Pressure Regulators

GasCon Systems

Cylinder **Pressure Regulators**

(Australian Standard)

Brass-Body

401 High Purity

"GC" Grade

Single-Stage

411 High Purity

Dual-Stage

also available **SS-Body : Corrosive Gases**
CGA(-180,N2) Bottle Thread

Restek Regulators & accessories

Siltek-treated **gas standards regulators**

MINIreg (Scott bottle)

Backpressure Reg

MiniCYL Reg

VICI Regulator/Controllers

Needle/ShutOff Valve

Mass Flow Controllers

Combo Pressure Reg

microMetering Valve

GasCon Systems

(Australian Standard)

Cylinder Pressure Regulators

(Australian Standard)

Brass-Body

401 High Purity

Single-Stage

411 High Purity

Dual-Stage

also available **SS-Body : Corrosive Gases**
CGA(-180,N2) Bottle Thread

see also Restek CGA Regulators & Accessories

Gascon Systems Single Stage Regulators

The Gascon Systems range of single stage regulators are manufactured from brass bar stock and are recommended for use in non-corrosive gas applications. Versions are available for industrial, laboratory, medical and scientific grade gases.

Wide range of options including; inlet connection orientations, inlet fittings (eg. AS, CGA, BS, DIN, AFNOR), diaphragm materials, outlet pressure ranges, ventable pressure relief valves, internal flow restrictors for pressure charging systems, preset outlet pressure models, different seat configurations for different flow/pressure characteristics, wall mount brackets and panel mount kits.

- Encapsulated seat assembly with built-in filter
- Bar Stock body
- Maximum outlet pressure adjusting stop
- Colour coded control knobs
- Australian made

Applications:

- For use in non-corrosive gas applications
- Where a slight variation in delivery pressure is acceptable as cylinder contents pressure decreases
- Regulator is used for intermediate short periods of time
- Used with liquefied gas supplies
- Laboratory reticulation system supply regulator.

Specifications:

Max. Inlet Pressure: 20,000 kPa @ 15°C (31,500 kPa optional)

Outlet Pressures: 0 – 20,000 kPa

Gauges: 50mm diameter brass

Body Ports: ¼" NPT (F)

Weight: 1.4 kg

Materials:

Body: Chrome plated brass bar stock

Bonnet: Chrome plated brass

Seat: PCTFE or PTFE

Filter: 63 micron cupro nickel

Diaphragm: Neoprene; EDPM; PTFE coated neoprene; or 316L stainless steel

ORDERING INFORMATION XX - X - X - X - XXXX - XXX - XXX - XXX - XX - XXXX

Model	Ports	Inlet	Pressure Adjustment	Outlet Pressure	Optional Fittings	Inlet Fitting	Outlet Fitting	Options	Gas
R Standard (up to grade 3.5) **PR** Laboratory (up to grade 4.5) **HR** High Purity (up to grade 5.5) **MR** Medical	**2** **3** **4** **5** **6**	**V** Vertical **S** Side **R** Rear	**A** Adjustable **P** Preset	Required Outlet Pressure in kPa	**G** Inlet Gauge **GG** Inlet & Outlet Gauge **P** Pressure Relief Valve **GGP** 2 Gauges & PRV	**T10** (AS2473 Type 10) **T11** (AS2473 Type 11) **T20** (AS2473 Type 20) **T30** (AS2473 Type 30) **T50** (AS2473 Type 50) **T51** (AS2473 Type 51) **T60** (AS2473 Type 60) **T61** (AS2473 Type 61) **320** (CGA320) **330** (CGA330) **350** (CGA350) **510** (CGA510) **540** (CGA540) **580** (CGA580) **Y** (Medical Yoke) **4F** (1/4" Female NPT) **Others by Description**	**4F** (1/4" Female Port) **2S** (1/8" Tube Fitting) **4S** (1/4" Tube Fitting) **6S** (3/8" Tube Fitting) **8S** (1/2" Tube Fitting) **2M** (1/8"NPT male) **4M** (1/4" NPT male) **6M** (3/8" NPT male) **8M** (1/2" NPT male) **2B** (1/8" hose barb) **4B** (1/4" hose barb) **8B** (1/2" hose barb) **FA** (fine adjust valve) **58R** (5/8"-18UN RH) **58L** (5/8"-18UN LH) **SIS** (medical sleeve indexed system) **Others by Description**	**WM** Wall Mount Bracket **PM** Panel Mount Bracket	**ACET** Acetylene **AIR** Air **AR** Argon **CO** Carbon Monoxide **CO2** Carbon Dioxide **HE** Helium **H2** Hydrogen **LPG** Propane **METH** Methane **N2** Nitrogen **N2O** Nitrous Oxide **OXY** Oxygen **SF6** Sulfur Hexafluorid **OTHERS by Symbol**

Ordering examples

HR-5-V-A-1000-GGP-T20-4S-H2 — Scientific hydrogen single stage regulator, vertical Type 20 inlet, adjustable to 1000 kPa, inlet and outlet gauges, pressure relief valve and ¼" brass tube outlet fitting

MR-4-S-P-400-GP-Y-SIS-AIR — Medical air single stage regulator, side pin indexed yoke inlet, preset 400 kPa, inlet gauge, pressure relief valve and a sleeved indexed outlet fitting

GC Systems Dual Stage Regulators

The GC Systems range of dual stage regulators are manufactured from brass bar stock and are recommended for use in non-corrosive gas applications. Versions are available for industrial, laboratory, medical and scientific grade gases.

Wide range of options including; inlet connection orientations, inlet fittings (eg. AS, CGA, BS, DIN, AFNOR), diaphragm materials, outlet pressure ranges, ventable pressure relief valves, preset outlet pressure models, different seat configurations for different flow/pressure characteristics, and panel mount kits.

- Encapsulated seat assembly with built-in filter
- Bar Stock body
- Maximum outlet pressure adjusting stop
- Australian made

Applications:

- For use in non-corrosive gas applications
- Where a constant delivery pressure is required as cylinder contents pressure decreases
- Regulator is used for continuous long periods of time
- Laboratory reticulation system supply regulator

Specifications:

Max. Inlet Pressure: 20,000 kPa @ 15°C (31,500 kPa optional)

Outlet Pressures: 0 – 5,000 kPa

Gauges: 50mm diameter brass

Body Ports: ¼" NPT (F)

Weight: 2.1 kg

Materials:

Body: Chrome plated brass bar stock

Bonnet: Chrome plated brass

Seat: PCTFE or PTFE

Filter: 63 micron cupro nickel

Diaphragm: Neoprene; EDPM; PTFE coated neoprene; or 316L stainless steel

ORDERING INFORMATION XX - X - X - X - XXXX - XXX - XXX - XXX -XXX - XXXX

Model	Ports	Inlet	Pressure Adjustment	Outlet Pressure	Optional Fittings	Inlet Fitting	Outlet Fitting	Options	Gas
D Standard (up to grade 3.5) **PD** Laboratory (up to grade 4.5) **HD** High Purity (up to grade 5.5) **MD** Medical	**2** **3** **4** **5** **6**	**V** Vertical **S** Side	**A** Adjustable **P** Preset	Required Outlet Pressure in kPa	**G** Inlet Gauge **GG** Inlet & Outlet Gauge **P** Pressure Relief Valve **GGP** 2 Gauges & PRV **GGPP** 2 Gauges & 2 PRV's	**T10** (AS2473 Type 10) **T11** (AS2473 Type 11) **T20** (AS2473 Type 20) **T30** (AS2473 Type 30) **T50** (AS2473 Type 50) **T51** (AS2473 Type 51) **T60** (AS2473 Type 60) **T61** (AS2473 Type 61) **320** (CGA320) **330** (CGA330) **350** (CGA350) **510** (CGA510) **540** (CGA540) **580** (CGA580) **Y** (Medical Yoke) **4F** (1/4" Female NPT) **Others by Description**	**4F** (1/4" Female Port) **2S** (1/8" Tube Fitting) **4S** (1/4" Tube Fitting) **6S** (3/8" Tube Fitting) **8S** (1/2" Tube Fitting) **2M** (1/8"NPT male) **4M** (1/4" NPT male) **6M** (3/8" NPT male) **8M** (1/2" NPT male) **2B** (1/8" hose barb) **4B** (1/4" hose barb) **8B** (1/2" hose barb) **FA** (fine adjust valve) **58R** (5/8"-18UN RH) **58L** (5/8"-18UN LH) **SIS** (medical sleeve indexed system) **Others by Description**	**PM** Panel Mount Bracket	**ACET** Acetylene **AIR** Air **AR** Argon **CO** Carbon Monoxide **CO2** Carbon Dioxide **HE** Helium **H2** Hydrogen **LPG** Propane **METH** Methane **N2** Nitrogen **N2O** Nitrous Oxide **OXY** Oxygen **SF6** Sulfur Hexafluorid **OTHERS by Symbol**

Ordering examples

HD-5-V-A-700-GGP-T10-4ST-OXY Scientific oxygen dual stage regulator, vertical Type 10 inlet, adjustable to 700 kPa, inlet and outlet gauges, pressure relief valve and ¼" stainless steel tube outlet fitting

PD-5-S-A-100-GP-Y-4B-CO2 Medical carbon dioxide dual stage regulator, side pin indexed yoke inlet, adjustable to 100 kPa, inlet And outlet gauges, pressure relief valve and a ¼" hose barb outlet

401 Series Single Stage Brass Bodied Scientific Regulator

- Pressure ranges of 0-15 to 0-500 PSI are available to cater for a broad range of applications
- Brass barstock body means a smoother surface finish
- Versatility of configuring the regulator with either front or rear panel mounting
- Metal-to-metal diaphragm seal prevents gas contamination
- Capsule seat design for greater serviceability and life
- 316L stainless steel diaphragm
- Leak test certificate

The 401 Series regulators are intended for primary pressure control of non-corrosive, high purity or liquefied gases, or where minor fluctuations in outlet pressure (as gas supply diminishes) can be tolerated.

Specifications:

Max. Inlet Pressure: 3000 PSI (210 BAR)
4500 PSI (310 BAR) Option

Gauges: 2" diameter brass, (chrome plated)

Temperature Range: -40º C to 60º C

Body Ports: ¼" FPT

Helium Leak Integrity: 1 x 10^{-9} scc/sec

Cv: 0.1

Weight: 1.8 kg

Materials:

Body: Brass bar stock

Bonnet: Chrome plated brass

Seat: PTFE
PCTFE with 4500 PSI inlet option

Filter: 10 micron sintered bronze

Diaphragm: 316L stainless steel

Internal Seals: PTFE

ORDERING INFORMATION

S401 - XXX - XXX - XXX - XX

Series	Outlet Pressure	Inlet Fitting	Outlet Fitting	Options
401	**15** (0-15 psi)	**T10** (AS2473 Type 10)	**4F** (1/4" NPT Female)	Inlet Purge
	50 (0-50 psi)	**T20** (AS2473 Type 20)	**2S** (1/8" Tube)	Captured Bonnet Vent
	100 (0-100 psi)	**T30** (AS2473 Type 30)	**4S** (1/4" Tube)	Panel Mount Kit
	150 (0-150 psi)	**T50** (AS2473 Type 50)	**8S** (1/2" Tube)	Wall Mount Bracket
	250 (0-250 psi)	**T60** (AS2473 Type 60)	**2B** (1/8" Hose Barb)	
	500 (0-500 psi)	**350** (CGA350)	**4B** (1/4" Hose Barb)	
		540 (CGA540)	**FA** (Fine adjust valve)	
		580 (CGA580)	**4M** (1/4" NPT Male)	
		4F		
		Others by description	Others by description	

401 Series Regulator

Single Stage

Brass Barstock Body

Six-Port Configuration

316L Stainless Steel Diaphragm

401-1331 shown

The 401 Series regulators are intended for primary pressure control of noncorrosive, high purity or liquefied gases, or for applications where minor fluctuations in outlet pressure due to diminishing inlet supply can be tolerated.

Typical Applications

- *Gas and liquid chromatography*
- *High purity carrier gases*
- *Zero, span and calibration gases*
- *High purity chamber pressurization*
- *Liquefied hydrocarbon gas control*
- *Control of cryogenic gases*

Advanced Features

- *Brass barstock body*
  Smooth surface finish
- *Front and rear panel mountable*
  Versatile system configuration
- *Pressure ranges 0-15 to 0-500 PSIG*
  Broad range of applications

400 Advantage

- *Metal-to-metal diaphragm seal*
  No possibility of gas contamination
- *Capsule® seat*
  Increased serviceability and life
- *316L stainless steel diaphragm*
  No inboard diffusion
- *Orientable captured vent capable*
  Safety in any installation
- *Low wetted surface area*
  Minimal purge requirements
- *Field-adjustable pressure limit*
  Safeguard downstream equipment
- *Pipe away relief valve*
  Safely vent exhaust gases
- *Delivery pressure range easily changed*
  Maximum flexibility

Materials

Body
Brass barstock

Bonnet
Chrome Plated barstock

Seat
PTFE
PCTFE with 4500 PSIG inlet option

Filter
10 micron sintered bronze

Diaphragm
316L stainless steel

Internal Seals
PTFE

Specifications

Maximum Inlet Pressure
3000 PSIG (210 BAR)
4500 PSIG (310 BAR) optional

Temperature Range
-40°F to 140°F (-40°C to 60°C)

Gauges
2" diameter chrome plated

Ports
¼" FPT

Helium Leak Integrity
1 x 10^{-9} scc/sec

Cv
0.1

Weight (401-1331-580)
3.99 lbs. (1.81 kg)

CRN OH 5216.5C

Flow Performance Curves

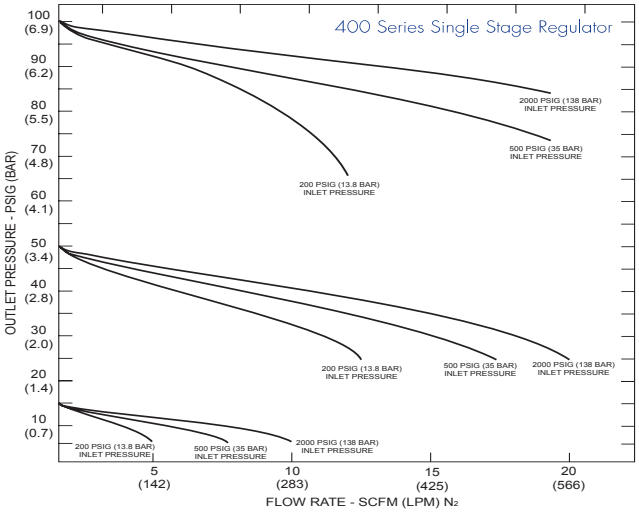

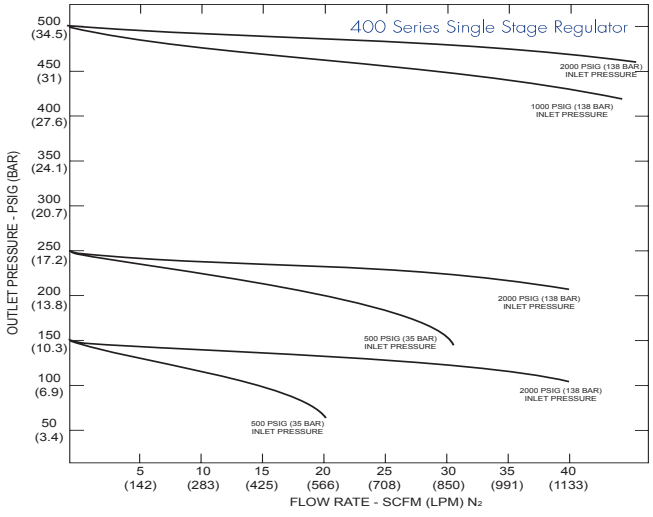

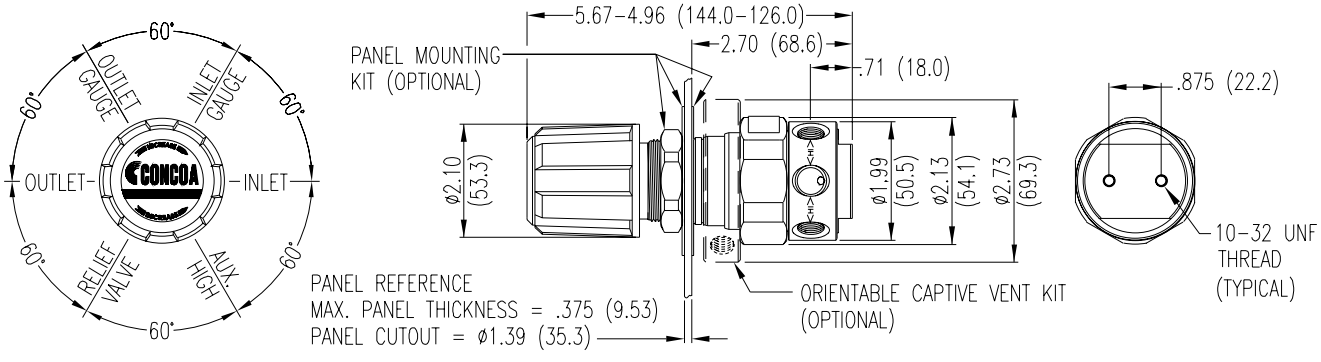

Ordering Information *(For information about how to use this table please see page 4.)*

401	A	B	C	D	-Inlet	Options
Series 401	**Outlet Pressure** / **Outlet Gauge** 1: 0-15* 30"-0-30 PSIG 2: 0-50 30"-0-100 PSIG 3: 0-100 30"-0-200 PSIG 4: 0-250 0-400 PSIG 5: 0-500** 0-1000 PSIG 7: 0-150 30"-0-200 PSIG **Not available with 4500 PSIG maximum inlet pressure* ***Standard assembly does not include relief valve*	**Inlet Gauge** 0: None 3: 0-4000 PSIG 5: 0-1000 PSIG 6: 0-300 PSIG 7: 0-400 PSIG 8: 0-6000 PSIG* **Maximum inlet pressure 4500 PSIG (310 BAR) with PCTFE Seat Capsule*	**Outlet Assemblies** 0: ¼" FPT Port 1: ¼" MPT 2: ¼" Tube Fitting 3: Diaphragm Valve ¼" Tube Fitting 4: Diaphragm Valve ¼" MPT 5: Needle Valve ¼" MPT 6: 1/8" Tube Fitting 7: 1/8" Tube Fitting 8: Diaphragm Valve 1/8" Tube Fitting 9: Diaphragm Valve ¼" FPT A: 1/8" BSP Right Hand Fitting M: 6mm Tube Fitting S: Diaphragm Valve 6mm Tube Fitting	**Assembly/ Gauges** 0: Bare Body 1: Standard Assembly (PSIG/kPa Gauges) 2: Standard Assembly (BAR/PSIG Gauges) 4: Cleanroom Assembly (PSIG/kPa Gauges) 5: Cleanroom Assembly (BAR/PSIG Gauges)	**Inlet Connections** 000: ¼" FPT TF2: 1/8" Tube TF4: ¼" Tube TF6: 1/8" Tube M06: 6mm Tube	**Installed Options** A: Protocol Alarm Station (110V) B: Protocol Alarm Station (220V) C: Protocol Switchover Station D: Deep Purge* G: Protocol Switchover Station with Alarm (110V) H: Protocol Switchover Station with Alarm (220V) M: Protocol Station **Not available with 4500 PSIG max inlet pressure*

Related Op

- Panel Mount Kit (550-0002)
- Captured Vent Kit (550-0001)

411 Series Dual Stage Brass Bodied Scientific Regulator

The 411 Series regulators are intended for primary pressure control of non-corrosive, high purity or liquefied gases for applications requiring constant pressure control and delivery regardless of supply pressure variations.

- Pressure ranges of 0-15 to 0-400 PSI are available to cater for a broad range of applications
- Brass barstock body means a smoother surface finish
- Front panel mountable that is easily installed
- Metal-to-metal diaphragm seal prevents gas contamination
- Capsule seat design for greater serviceability and life
- 316L stainless steel diaphragm
- Leak test certificate

Specifications:

Max. Inlet Pressure: 3000 PSI (210 BAR)
4500 PSI (310 BAR) Option

Gauges: 2" diameter brass, (chrome plated)

Temperature Range: -40º C to 60º C

Body Ports: ¼" FPT

Helium Leak Integrity: 1 x 10^{-9} scc/sec

Cv: 0.1

Weight: 2.4 kg

Materials:

Body: Brass bar stock

Bonnet: Brass bar stock

Seat: PTFE
PCTFE with 4500 PSI inlet option

Filter: 10 micron sintered bronze

Diaphragm: 316L stainless steel

Internal Seals: PTFE

ORDERING INFORMATION

S411 - XXX - XXX - XXX - XX

Series	Outlet Pressure	Inlet Fitting	Outlet Fitting	Options
411	**15** (0-15 psi)	**T10** (AS2473 Type 10)	**4F** (1/4" NPT Female)	Inlet Purge
	50 (0-50 psi)	**T20** (AS2473 Type 20)	**2S** (1/8" Tube)	Captured Bonnet Vent
	100 (0-100 psi)	**T30** (AS2473 Type 30)	**4S** (1/4" Tube)	Panel Mount Kit
	150 (0-150 psi)	**T50** (AS2473 Type 50)	**8S** (1/2" Tube)	
	250 (0-250 psi)	**T60** (AS2473 Type 60)	**2B** (1/8" Hose Barb)	
	400 (0-400 psi)	**350** (CGA350)	**4B** (1/4" Hose Barb)	
		540 (CGA540)	**FA** (Fine adjust valve)	
		580 (CGA580)	**4M** (1/4" NPT Male)	
		4F (1/4" NPT Female)	**DK** (1/4" Diaphragm valve)	
		Others by description	**Others by description**	

411 Series Regulator

Dual Stage

Brass Barstock Body

Six-Port Configuration

316L Stainless Steel Diaphragm

411-1331 shown

The 411 Series regulators are intended for primary pressure control of noncorrosive, high purity or liquefied gases for applications requiring constant pressure control and delivery regardless of supply pressure variations.

Typical Applications

- *EPA Protocol gases*
- *Gas and liquid chromatography*
- *High purity carrier gases*
- *Zero, span and calibration gases*
- *High purity chamber pressurization*

Advanced Features

- *Brass barstock body*
  Smooth surface finish
- *Front panel mountable*
  Easy installation
- *10 micron filtration in both stages*
  Fail-safe seat performance
- *Pressure ranges 0-15 to 0-250 PSIG*
  Broad range of applications

400 Advantage

- *Metal-to-metal diaphragm seal*
  No possibility of gas contamination
- *Capsule® seat*
  Increased serviceability and life
- *316L stainless steel diaphragm*
  No inboard diffusion
- *Orientable captured vent capable*
  Safety in any installation
- *Low wetted surface area*
  Minimal purge requirements
- *Field-adjustable pressure limit*
  Safeguard downstream equipment
- *Pipe away relief valve*
  Safely vent exhaust gases
- *Delivery pressure range easily changed*
  Maximum flex

Materials

Body
Brass barstock

Bonnet
Chrome-Plated Brass barstock

Seat
PTFE
PCTFE with 4500 PSIG inlet option

Filter
10 micron sintered bronze

Diaphragm
316L stainless steel

Internal Seals
PTFE

Specifications

Maximum Inlet Pressure
3000 PSIG (210 BAR)
4500 PSIG (310 BAR) optional

Temperature Range
-40°F to 140°F (-40°C to 60°C)

Gauges
2" diameter Chrome Plated

Ports
¼" FPT

Helium Leak Integrity
1×10^{-9} scc/sec

Cv
0.1

Weight (411-2331-580)
5.3 lbs. (2.40 kg)

CRN OH 5216.5C

Flow Performance Curves

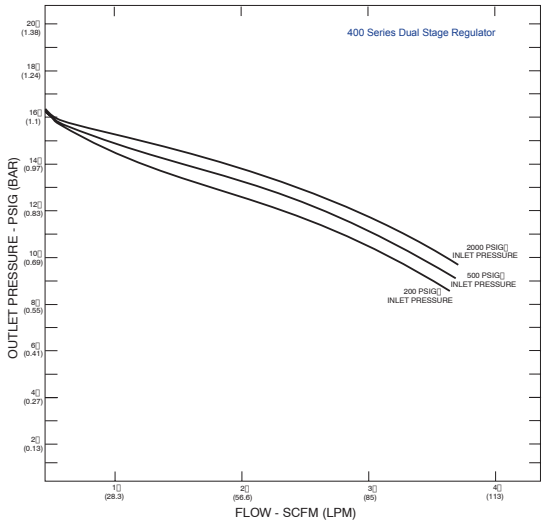

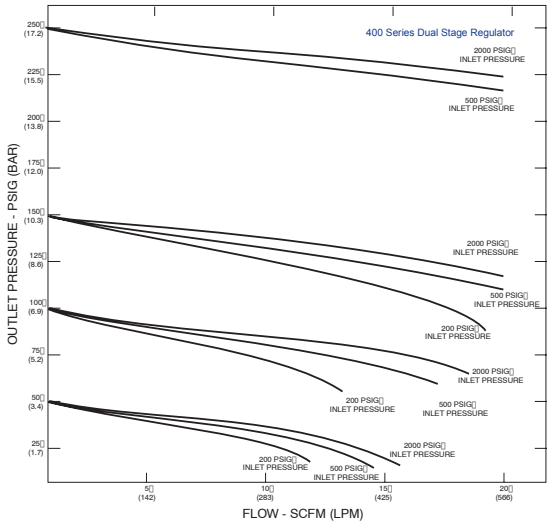

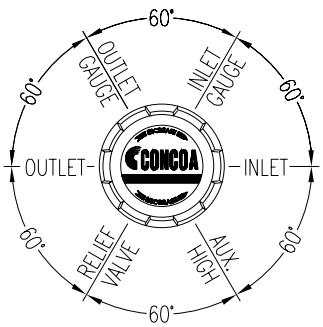

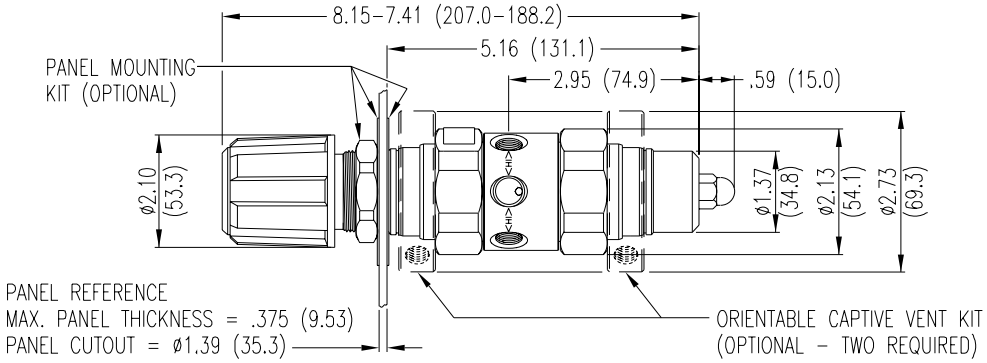

Ordering Information *(For information about how to use this table please see page 4.)*

411	A		B	C	D	-Inlet	Options
Series 411	**Outlet Pressure**	**Outlet Gauge**	**Inlet Gauge**	**Outlet Assemblies**	**Assembly/ Gauges**	**Inlet Connections**	**Installed Options**
	1: 0-15	30”-0-30 PSIG	0: None	0: ¼” FPT Port	0: Bare Body	000: ¼” FPT	A: Protocol Alarm Station (110V)
	2: 0-50	30”-0-100 PSIG	3: 0-4000 PSIG	1: ¼” MPT	1: Standard Assembly (PSIG/kPa Gauges)	TF2: 1/8” Tube	B: Protocol Alarm Station (220V)
	3: 0-100	30”-0-200 PSIG	5: 0-1000 PSIG	2: ¼” Tube Fitting	2: Standard Assembly (BAR/PSIG Gauges)	TF4: ¼” Tube	C: Protocol Switchover Station
	4: 0-250	0-400 PSIG	6: 0-300 PSIG	3: Diaphragm Valve ¼” Tube Fitting	4: Cleanroom Assembly (PSIG/kPa Gauges)	TF6: 1/8” Tube	D: Deep Purge*
	7: 0-150	30”-0-200 PSIG	7: 0-400 PSIG	4: Diaphragm Valve ¼” MPT	5: Cleanroom Assembly (BAR/PSIG Gauges)	M06: 6mm Tube	G: Protocol Switchover Station with Alarm (110V)
			8: 0-6000 PSIG*	5: Needle Valve ¼” MPT		CGA	H: Protocol Switchover Station with Alarm (220V)
			**Maximum inlet pressure 4500 PSIG (310 BAR) with PCTFE Seat Capsule®*	6: 1/8” Tube Fitting		DIN 477	M: Protocol Station
				7: 3/8” Tube Fitting		BS 341	**Not available with 4500 PSIG max inlet pressure*
				8: Diaphragm Valve 1/8” Tube Fitting		and others available	
				9: Diaphragm Valve ¼” FPT			
				A: 3/8” BSP Right Hand Fitting			
				M: 6mm Tube Fitting			
				S: Diaphragm Valve 6mm Tube Fitting			

Related Op

- Panel Mount Kit (550-0002)

492 Series Regulator

Single Stage

Piston-Sensed

Ultra-High Pressure

Chrome-Plated Brass Barstock Body

492-5952 shown

The 492 Series regulators are intended for primary pressure control of non-corrosive gases at a maximum inlet pressure of 6000 PSIG.

Typical Applications

- *Airplane strut charging*
- *Research and development laboratories*
- *Chemical manufacturing*
- *Aerospace hydraulic systems*
- *Pharmaceutical manufacturing*
- *Gauge calibration*

Advanced Features

- *Chrome-plated brass barstock body*
  Smooth surface finish
- *Front and rear panel mountable*
  Versatile system configuration
- *Pressure ranges 0-750 to 0-6000 PSIG*
  Broad range of applications
- *Six-port design*
  Flexible installation alternatives

Features

- *Large piston sensor*
  Safely control pressures to 6000 PSIG
- *Capsule® seat*
  Increased serviceability and life
- *Low wetted surface area*
  Minimal purge requirements
- *Field-adjustable pressure limit*
  Safeguard downstream equipment

Materials

Body
Chrome-plated brass barstock

Bonnet
Chrome-plated brass barstock

Seat
PCTFE (3000 and 4500 PSIG inlet)
Arlon® (PEEK) (6000 PSIG inlet)

Piston
Brass barstock

Filter
10 micron sintered brass

Internal Seals
Viton®

Specifications

Maximum Inlet Pressure
6000 PSIG (420 BAR)

Temperature Range
-40°F to 140°F (-40°C to 60°C)

Gauges
2½" diameter chrome-plated brass

Ports
¼" FPT

Cv
0.1

Weight (492-4851-680)
5.59 lbs. (2.54 kg)

Flow Performance Curves

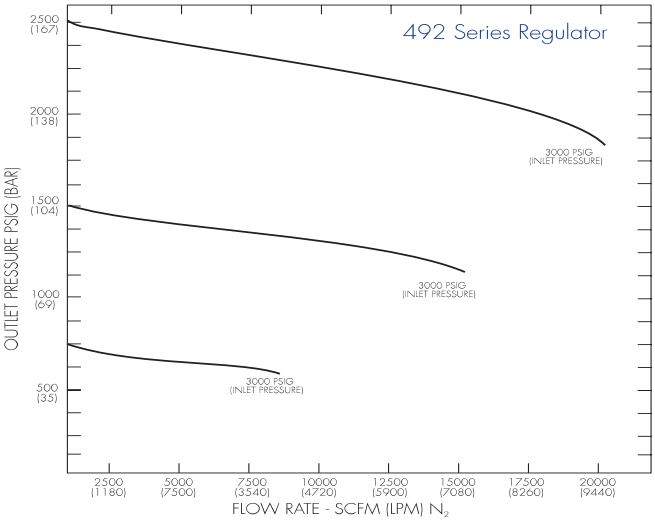

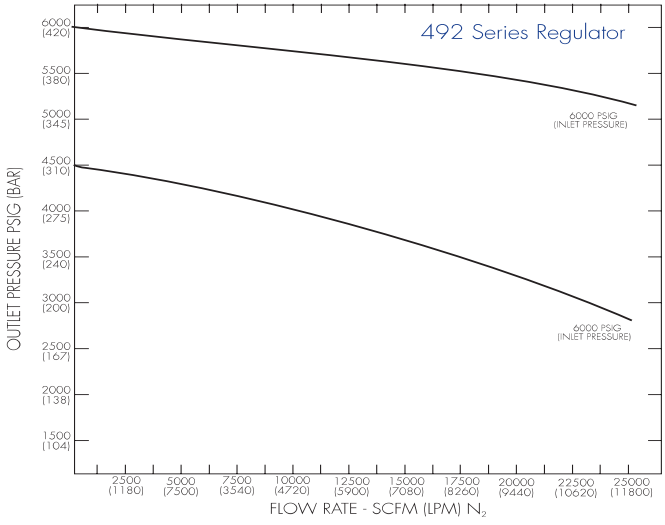

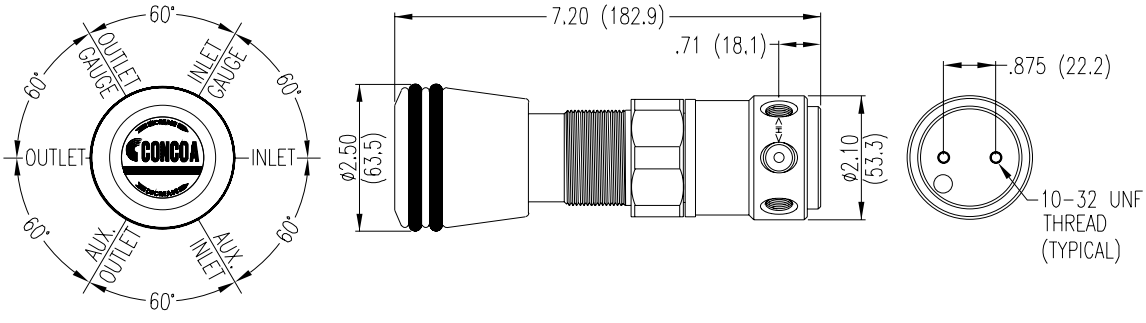

Ordering Information *(For information about how to use this table please see page 4.)*

492-	A		B		C	D	-Inlet	Options
Series 492	**Outlet Pressure**	**Outlet Gauge**	**Inlet Maximum**	**Inlet Gauge**	**Outlet Assemblies**	**Assembly/ Gauges**	**Inlet Connections**	**Installed Options**
	1: 0-750	0-1000 PSIG	0: 6000 PSIG	None	0: ¼" FPT	0: Bare Body*	CGA	A: Protocol Alarm Station (110V)
	2: 0-1500	0-4000 PSIG	3: 3000 PSIG	0-4000 PSIG	1: ¼" MPT	1: Standard Assembly (PSIG/kPa Gauges)	DIN 477	B: Protocol Alarm Station (220V)
	3: 0-2500	0-4000 PSIG	8: 5500 PSIG	0-6000 PSIG	2: ¼" Tube	2: Standard Assembly (BAR/PSIG Gauges)	BS 341	C: Protocol Switchover Station
	4: 0-4500*	0-6000 PSIG	9: 6000 PSIG	0-10,000 PSIG	5: Needle Valve ¼" MPT	*6000 PSIG maximum inlet only	and others available	G: Protocol Switchover Station with Alarm (110V)
	5: 0-6000†	0-10,000 PSIG			6: ⅛" Tube			H: Protocol Switchover Station with Alarm (220V)
	6: 0-3500*	0-6000 PSIG			7: ⅜" Tube			M: Protocol Station
	**Not available with 3000 PSIG maximum inlet pressure*				M: 6mm Tube			
	†Only available with 6000 PSIG maximum inlet pressure							

Related Op

- Panel Mount Kit (830-6483)

Silcosteel® Regulators

NEW!

Single and dual stage regulators are now available with Silcosteel® surface treatment. This proprietary passivation process, developed by SilcoTek™, provides excellent inertness for sulfur and mercury calibration standards and improved corrosion resistance over bare 316L stainless steel or other more expensive alloys.

Silcosteel® treated sampling and transfer systems allow oil and gas exploration, chemical and petrochemical plants, and refineries to obtain accurate sulfur and mercury data the first time, every time, with no delay, sample errors, or false readings, down to part-per-billion (ppb) levels. Analysts charged with monitoring sulfur and mercury levels in process streams can save thousands of dollars in improved yields, better test cycle times, and improved system reliability.

Applications:
- CEM Continuous Emission Monitoring
- Environmental Stack and Gas Emission Standards
- Low level sulfur and mercury analysis
- Reactive or corrosive gases
- Off-shore platform systems
- Corrosive and salt water exposure

Outlet pressure:	0 to 100 psig
Outlet gauge:	30" – 0 to 200 psig
Inlet gauge:	0 to 4000 psig
Outlet assembly:	diaphragm valve, 1/4" tube fitting

Description	qty.	cat.#	price
Single-Stage Regulator			
CGA 330 (H_2S and other reduced sulfurs)	ea.	21361-5	
CGA 350 (H_2, P_3)	ea.	21361-6	
CGA 660 (NO, NO_2, SO_2)	ea.	21361-11	
Dual-Stage Regulator			
CGA 330 (H_2S and other reduced sulfurs)	ea.	21360-2	
CGA 350 (H_2, P_3)	ea.	21360-7	
CGA 660 (NO, NO_2, SO_2)	ea.	21360-12	

For other CGA fittings, please contact your local Restek representative.

also available

Regulators for use with gas standards.

See **pages 433-434**.

Overview of Restek's Ultra-High Purity (UHP) Gas Regulators

- Regulators feature metal-to-metal seals throughout for long-term leak-tightness.
- Metal diaphragm outlet valve ensures gas purity.
- Each regulator is helium leak-test-certifiable to $1x10^{-8}$ scc/sec.
- Temperature range: -40 °C to 60 °C

Ultra-High Purity (UHP) Brass Body Gas Regulators

UHP brass regulators are the best choice when using ultra-high purity carrier gas for sensitive GC applications using MS, PID, or ECD detection methods. They feature reduced internal dead-volume, relative to stainless steel bodies. The metal valve diaphragm ensures leak-free shut-off. Oxidation-resistant chrome plating maintains a like-new appearance.

Dual-Stage Ultra-High Purity Chrome-Plated Brass Gas Regulators

- Oxidation-resistant, chrome-plated.
- Most stable outlet pressure control.
- Secondary pressure regulation not needed.
- Most widely used regulator.
- Less internal volume than stainless steel gas regulators.

Inlet gauge: 0 to 4,000psig (0-27,579kPa)
Outlet assembly: diaphragm valve, 1/4" tube fitting

Fitting	Outlet Pressure	Outlet Gauge	qty.	cat.#	price
CGA 580 (N_2 He, Ar)	0 to 100psig (0-689kPa)	30" – 0 to 200psig (0-1379kPa)	ea.	21667	
CGA 350 (H_2, P_5)	0 to 100psig (0-689kPa)	30" – 0 to 200psig (0-1379kPa)	ea.	21668	
CGA 590 (Air)	0 to 100psig (0-689kPa)	30" – 0 to 200psig (0-1379kPa)	ea.	21669	

Single-Stage Ultra-High Purity Chrome-Plated Brass Gas Regulators

- Oxidation-resistant, chrome-plated.
- Use when there is secondary pressure regulation downstream.
- Identical gas purity protection as with dual-stage gas regulators.

Inlet gauge: 0 to 4,000psig (0-27,579kPa)
Outlet assembly: diaphragm valve, 1/4" tube fitting

Fitting	Outlet Pressure	Outlet Gauge	qty.	cat.#	price
CGA 580 (N_2, He, Ar)	0 to 100psig (0-689kPa)	30" – 0 to 200psig (0-1379kPa)	ea.	20646	
CGA 350 (H_2, P_5)	0 to 100psig (0-689kPa)	30" – 0 to 200psig (0-1379kPa)	ea.	20647	
CGA 590 (Air)	0 to 100psig (0-689kPa)	30" – 0 to 200psig (0-1379kPa)	ea.	20648	

Ultra-High Purity Chrome-Plated Brass Line Gas Regulator

- Oxidation-resistant, chrome-plated.
- Use where you need to reduce the line pressure by 20 psig (138 kPa) or more.
- Same purity protection as high-pressure cylinder regulators.

Inlet connections: 1/4" FPT
Outlet assembly: 1/4" FPT port

Fitting	Outlet Pressure	Outlet Gauge	qty.	cat.#	price
1/4" female NPT ports*	0-50psig (0-345kPa)	30" - 0 to 100psig (0-689kPa)	ea.	21666	
1/4" female NPT ports*	0-100psig (0-689kPa)	30" - 0 to 200psig (0-1379kPa)	ea.	22452	

*Order appropriate male connector, pipe-to-tube fittings.

Swagelok® Male Connector, Pipe-to-Tube Fittings

23134

23179

Fitting Type	Size (inches)	Similar to Swagelok	Brass qty.	Brass cat.#	Brass price	Stainless Steel qty.	Stainless Steel cat.#	Stainless Steel price
Male Connector	1/4" to 1/4" NPT	400-1-4	10-pk.	23134	$44	2-pk.	23184	
Male Connector	1/8" to 1/4" NPT	200-1-4	10-pk.	23136	$50	2-pk.	23186	
Tube End Reducer	1/4" to 1/8"	200-R-4	5-pk.	23129	$29	2-pk.	23179	

Ultra-High Purity (UHP) Stainless Steel Body Gas Regulators

UHP stainless steel regulators are the standard for ultra-high-purity and corrosion-resistant pressure regulation. They are more easily purged of atmospheric components, compared to brass gas regulators, making them ideal for the most demanding applications. Stainless steel is especially useful in atmospheres of dry corrosive gases such as hydrogen.

Dual-Stage Ultra-High Purity Stainless Steel Gas Regulators

- Most stable outlet pressure control.
- Secondary pressure regulation not needed.

Inlet gauge: 0 to 4,000psig (0-27,579kPa)
Outlet assembly: diaphragm valve, 1/4" tube fitting

Fitting	Outlet Pressure	Outlet Gauge	qty.	cat.#	price
CGA 580 (N_2, He, Ar)	0 to 100psig (0-689kPa)	30" – 0 to 200psig (0-1379kPa)	ea.	20662	
CGA 350 (H_2, P_5)	0 to 100psig (0-689kPa)	30" – 0 to 200psig (0-1379kPa)	ea.	20663	
CGA 590 (Air)	0 to 100psig (0-689kPa)	30" – 0 to 200psig (0-1379kPa)	ea.	20664	

Single-Stage Ultra-High Purity Stainless Steel Gas Regulators

- Use when there is secondary pressure regulation downstream.
- Identical gas purity protection as with dual-stage gas regulators.

Inlet gauge: 0 to 4,000psig (0-27,579kPa)
Outlet assembly: diaphragm valve, 1/4" tube fitting

Fitting	Outlet Pressure	Outlet Gauge	qty.	cat.#	price
CGA 580 (N_2, He, Ar)	0 to 100psig (0-689kPa)	30" – 0 to 200psig (0-1379kPa)	ea.	20665	
CGA 350 (H_2, P_5)	0 to 100psig (0-689kPa)	30" – 0 to 200psig (0-1379kPa)	ea.	20666	
CGA 590 (Air)	0 to 100psig (0-689kPa)	30" – 0 to 200psig (0-1379kPa)	ea.	20667	

Flexible Stainless Steel Hoses

Description	Length	Fittings	qty.	cat. #	price
Flexible Stainless Steel Hose	36"	1/4" Female NPT	ea.	21339	
Flexible Stainless Steel Hose	18"	1/4" Female NPT	ea.	21340	
Flexible Stainless Steel Hose	36"	Stainless Steel CGA 580	ea.	21344	

Flammable Gas Flash Arrestor—Factory Mutual Approved*

- Gas flow shuts off in the event of a flashback.
- Flame extinguished—flame front prevented from reaching the gas supply.
- No gas flow restriction under normal operating conditions.

Description	qty.	cat.#	price
Flammable Gas Flash Arrestor, Brass Body	ea.	21334	

*Approved for brass body servicing hydrogen, acetylene, propane, or natural gas only.

CGA Fittings

CGA-specified nuts and nipples with internal frit, 1/4-inch NPT nickel-plated brass.

Description	qty.	cat.#	price
CGA 580 Fitting, (N_2, He, Ar)	ea.	21336	
CGA 350 Fitting, (H_2, P_5)	ea.	21337	
CGA 590 Fitting, (Air)	ea.	21338	

ordering **note**

International Fittings

All gas regulators are available with the following BS (British Standard) and DIN (German Industrial Standards Organization) connections. Please contact your local Restek representative for more information.

BS 341 #01	BS 341 #08	BS 341 #15	DIN 477 #06	DIN 477 #10	DIN 477 #14
BS 341 #02	BS 341 #10	DIN 477 #01	DIN 477 #07	DIN 477 #11	DIN 477 #15
BS 341 #03	BS 341 #13	DIN 477 #03	DIN 477 #08	DIN 477 #12	
BS 341 #04	BS 341 #14	DIN 477 #05	DIN 477 #09	DIN 477 #13	

Critical Purity Automatic Switchover System for Noncorrosive Gases


20668580

High-purity automatic switchover systems provide a continuous supply of high purity gas to the laboratory, process, or instrument, to allow you to replace a depleted gas source without interruption in the gas supply. Continuous gas supply is achieved by setting the two regulators at slightly different pressures and discharging one side of the system at a time. These models include flexible, all-stainless-steel pigtails with armor casing. The CGA connection on each pigtail has a check valve in the gland to prevent contamination and minimize purging requirements.

Switching pressure:	200psig/170psig (1379/1172kPa)
Inlet connections:	flexible SS pigtails (36")
Line regulator:	0 to 100psig (0-689kPa)

Brass Automatic Switchover System with Line Regulator	qty.	cat.#	price
CGA 580 (N_2, He, Ar)	ea.	20668580	
CGA 350 (H_2, P_5)	ea.	20668350	
CGA 590 (Air)	ea.	20668590	
Stainless Steel Automatic Switchover System with Line Regulator	**qty.**	**cat.#**	**price**
CGA 580 (N_2, He, Ar)	ea.	21593580	

Protocol Station


21347

The protocol station is designed for convenient wall mounting of high-purity gas regulators. Wall mounting provides ease of use, prevents gas regulator damage, and improves safety. Either chrome-plated brass or 316 stainless steel option is complete with a 3-foot, flexible, all-stainless-steel pigtail with armor casing. The CGA connection on the pigtail has an integral check valve in the gland to prevent contamination during cylinder changeout.

Chrome-Plated Brass Protocol Station*	qty.	cat.#	price
CGA 580 (N_2, He, Ar)	ea.	21347	
CGA 350 (H_2, P_5)	ea.	21348	
CGA 590 (Air)	ea.	21349	
Stainless Steel Protocol Station*	**qty.**	**cat.#**	**price**
CGA 580 (N_2, He, Ar)	ea.	21327	

*Pressure regulator not included. Order separately.


21321

Cylinder Valve Wrench

This specially-designed wrench enables easy opening of cylinder valves that are fitted with a hand wheel. It is also suitable for removing difficult cylinder caps.

Description	qty.	cat.#	price
Cylinder Valve Wrench	ea.	21321	


21322

Universal Cylinder Wrench

Use this versatile wrench for tightening gauges and gas regulator CGA fittings to cylinder outlets and pipe thread connections.

Description	qty.	cat.#	price
Universal Cylinder Wrench	ea.	21322	


20635

Backpressure Gas Regulator

Capillary GC inlet systems have backpressure regulators to maintain a constant upstream pressure and rapidly respond to catastrophic leaks. The 0–60 psig (0-414 kPa) operating range is sufficient to operate a 105 m, 0.25 mm ID column at its optimum flow rate.

Description	qty.	cat.#	price
Backpressure Gas Regulator	ea.	20635	

MINICYL Regulator


20610

This compact general purpose regulator has many laboratory applications including air-drying glassware, sparging or evaporating solutions, and controlling pneumatic valves. It is constructed of lightweight aluminum with an elastomer diaphragm. Includes a 0–60 psig (0-414 kPa) gauge and either $^1/_8$- or $^1/_4$-inch tube fittings.

Description	Fittings	qty.	cat.#	price
MINICYL Regulator	$^1/_8$" Fittings	ea.	20610	
MINICYL Regulator	$^1/_4$" Fittings	ea.	20611	

Cylinder Holders, Wall Mounted

Prevent serious injuries! These holders are designed to prevent free-standing gas cylinders from tipping over and injuring personnel. The cast aluminum holder can be secured to a wall or the side of a work bench. Each mount will secure a cylinder 4-15 inches in diameter.

Description	Size	qty.	cat.#	price
Cylinder Holder, Wall Mounted	Single	ea.	21333	
Cylinder Holder, Wall Mounted	Double	ea.	23400	
Cylinder Holder, Wall Mounted	Triple	ea.	23401	
Cylinder Holder, Wall Mounted	Four	ea.	23402	

For these cylinders:

Scotty® (Air Liquide) 14
Contents: 14 liters
Pressure: 240 psig (17 bar)
Outlet Fitting: CGA 160
Weight: 1.5 lbs/0.7 kg
Dimensions: 3" diameter x 11" height (7.6 x 28 cm)
DOT Specifications: 4B240
Please note: This cylinder is not approved for use in Canada.

Scotty® (Air Liquide) 48
Contents: 48 liters
Pressure: 300 psig (21 bar)
Outlet Fitting: CGA 165
Weight: 1.75 lbs/0.8 kg
Dimensions: 4" diameter x 16 1/4" height (10.2 x 41 cm)
DOT Specifications: 39 NRC

Use these regulators:

Regulators
for use with 14-liter and 48-liter Scott (Air Liquide) Transportable Gases

Specifications:
Maximum Inlet Pressure: 300 psig
Outlet Pressure Range: 2–10 psig
Maximum Delivery Pressure: 25 psig
Operating Temperature Range: 35 °F to 150 °F (2 °C to 65 °C)
Outlet Connection: 1/4" female NPT

Materials of Construction:
Body: Brass
Diaphragm: Viton®
Seat: Acetal
Seal: Viton®


22690

Use the CGA 160 inlet connection with 14-liter Scott/Air Liquide Transportable Gases. Use the CGA 165 inlet connection with 48-liter Scott/Air Liquide Transportable Gases.

Description	qty.	cat.#	price
Regulator, CGA 160 Inlet Connection	ea.	22690	
Regulator, CGA 165 Inlet Connection	ea.	22691	


21118

Syringe Adapter Kit for Single-Stage VOC Regulator
Use to withdraw sample from a high-pressure cylinder after pressure reduction through the high-purity VOC single-stage regulator.

Kit contains one nickel-plated brass 1/4" NPT to female luer fitting, which can be used with an A-2 Luer syringe (cat.# 20162 or 20163, see page 385), and one stainless steel 1/4" NPT x 1/8" compression fitting with septum (can be used with any syringe needle).

Description	qty.	cat.#	price
Syringe Adapter Kit	kit	21118	

also **available**

Single-Stage and Dual-Stage Ultra-High Purity Gas Regulators
See pages 309–311.

Gas Regulators for Transportable Cylinders

For this cylinder:

DCG Partnership Cylinders:
Size: 7.6 x 24 cm
CGA-170/110 connection.
US DOT Specs: DOT-4B-240ET

Please note: This cylinder is not approved for use in Canada.

Use this regulator:

Mini-Regulator for natural gas and refinery gas standards

- 0–300 psig inlet pressure range.
- 0–15 psig outlet pressure range.
- Supplied with 0–15 psig outlet pressure gauge, brass CGA 170 nut and nipple.

22032

Description	qty.	cat.#	price
Mini-Regulator	ea.	22032	

For these cylinders:

Spectra (Linde) 104L:
Aluminum construction
Size: 8 x 24 cm
Volume/Pressure:
104 liters of gas
@ 1,800 psi
CGA-180 outlet fitting.
Weight: 1.5 lbs/0.7 kg

Scotty® (Air Liquide) 110L
(Pi-marked Cylinders for EU Regulations):
Aluminum construction
Size: 8.3 x 29.5 cm
Volume/Pressure:
110 liters of gas @ 1,800 psi
CGA-180 outlet fitting.
Weight: 2.2 lbs/1 kg
DOT Specifications: 3AL2216

Use these regulators:

Spectra Gas 7621 High-Purity VOC Regulator

- Single-stage, stainless steel.
- Two pressure gauges and CGA-180 fitting.
- 3,000 psig maximum inlet pressure.
- Stainless steel diaphragm and Kel-F® seat.
- 1/8-inch tube compression outlet.
- Low internal volume: 3.03 cc.
- Accurate pressure control even at low flow rates.
- Individually tested for leaks and impurities.

21572

Description	qty.	cat.#	price
0–30psig outlet pressure gauge	ea.	21572	
0–100psig outlet pressure gauge	ea.	21572-R100	

See next page for a syringe adapter kit.

Continued on next page.

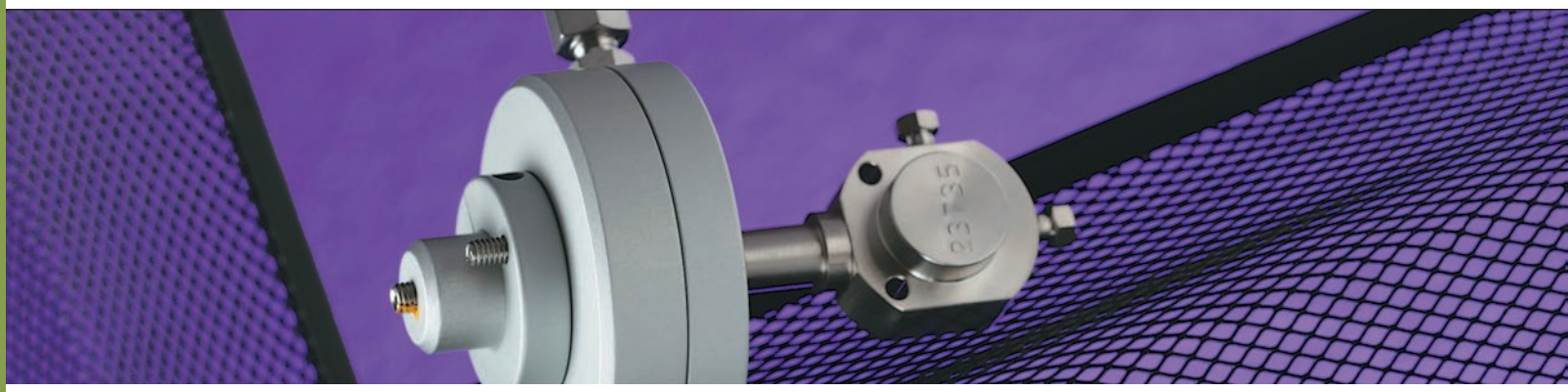

Flow, Pressure, and On/Off Control Devices

This section includes stainless needle valves, our combination on/off needle valves, high pressure prime/purge and on/off valves, and VICI pressure regulators and flow controllers.

Because cast parts can introduce porosity and contamination, every VICI control device is assembled from components which are precision-machined from bar stock. This assures that every item has the same high quality workmanship, with careful assembly and testing to rigid standards.

On/Off and Prime/Purge Valves

Valco high pressure on/off or prime/purge valves feature quality engineering, precision machining, and extremely low internal volume (< 2 µl), making them the ideal choice in the most demanding liquid or supercritical fluid chromatography or extraction systems.* The on/off function is self-explanatory; in prime/purge models, mobile phase flows around the needle when the valve is closed, relieving the back pressure from the column. When the valve opens, mobile phase vents to waste to prime the pump.

Standard models provide leak-tight operation up to 10,000 psi (690 bar) at 100°C, with high temperature versions rated up to 6,000 psi/300°C. A 1/16" fitting model with a larger bore and a 1/8" fitting model are available for high flow applications.

The valve needle is made from a special high strength alloy which is resistant even to the buffer salts which might accidentally precipitate inside the valve. Seals are fluorocarbon, with valve bodies machined from HPLC grade stainless steel, ensuring long lifetime in even the most demanding situations.

The on/off and prime/purge valves are available in manual or air/CO_2 actuated versions. The automated valves require a single three-way solenoid: application of 50 psi opens the valve; venting the air allows the spring to return the valve to the closed position.

Not suitable for use with gases.

ULTRA-HIGH PRESSURE VALVES
See our new 40,000 psi on/off and prime/purge valves
page 85

On/off valves

SPECS

	Temp	Pressure
Standard temperature		
1/16"	100°C	10,000 psi
High temperature / high pressure		
1/16"	300°C	6,000 psi
1/8"	300°C	2,000 psi

Fitting size	Bore	Manual Prod No	Manual with 4" standoff Prod No	Air actuated with 1" standoff Prod No	Air actuated with 4" standoff Prod No
Standard temperature					
1/16"	0.50 mm	SFVO	–	ASFVO	–
	0.75 mm	SFVOL	–	ASFVOL	–
High temperature / high pressure					
1/16"	0.50 mm	SFVOHT	SFVOHT4	ASFVOHT	ASFVOHT4
	0.75 mm	–	–	ASFVOLHT	ASFVOLHT4
1/8"	1.50 mm	–	–	ASFVO2HT	ASFVO2HT4

Prime/purge valves

SPECS

	Temp	Pressure
Standard temperature		
1/16"	100°C	10,000 psi
High temperature / high pressure		
1/16"	300°C	6,000 psi
1/8"	300°C	2,000 psi

Fitting size	Bore	Manual Prod No	Air actuated with 1" standoff Prod No	Air actuated with 4" standoff Prod No
Standard temperature				
1/16"	0.50 mm	SFV	ASFV	–
	0.75 mm	SFVL	ASFVL	–
High temperature / high pressure				
1/16"	0.50 mm	–	ASFVHT	ASFVHT4
	0.75 mm	–	ASFVLHT	ASFVLHT4
1/8"	1.50 mm	–	ASFV2HT	ASFV2HT4

Air actuator option

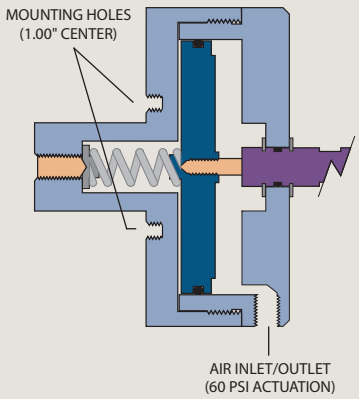

On/off valve

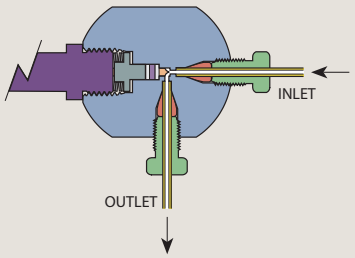

OPEN POSITION

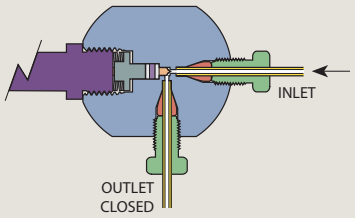

CLOSED POSITION

Prime/purge valve

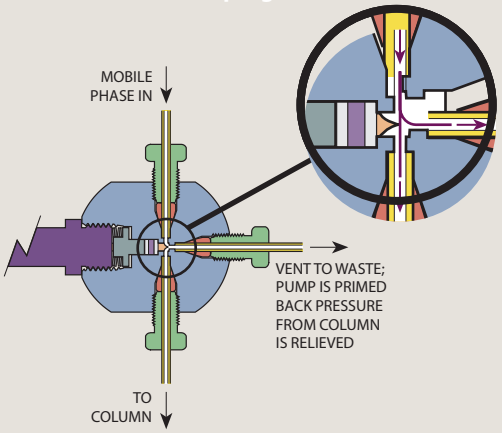

OPEN POSITION

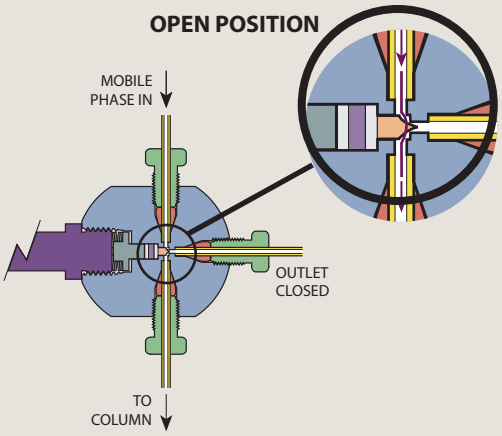

CLOSED POSITION

Combo Valves

A new generation needle and shut-off valve provides screwdriver-adjustable control and positive shut-off without damage to the needle. It is ideal for providing hydrogen and air to an FID, since the flow setting is not changed by turning the valve on and off. It can also be used to supply make-up or combustion gas in a wide variety of applications.

The valve body materials are anodized aluminum or stainless steel, with Viton O-ring seals. Maximum temperature is 100°C, and maximum inlet pressure is 100 psig. The valve can be panel-mounted in an 11/16" or 3/4" hole, using hardware supplied, and all are supplied with Valco 1/16" ZDV fittings. Other configurations are available in OEM quantity upon request.

The standard knob is silver-colored and .62" long. Colored knobs for gas identification are available separately, in two lengths.

Combo valves

Maximum flow @ 40 psi He or N_2	Aluminum body *Prod No*	Stainless body *Prod No*
10 ml/min	CNV1A10S1	CNV1S10S1
50 ml/min	CNV1A50S1	CNV1S50S1
150 ml/min	CNV1A150S1	CNV1S150S1
250 ml/min	CNV1A250S1	CNV1S250S1
500 ml/min	CNV1A500S1	CNV1S500S1

SPECS
Inlet pressure: 100 psi
Maximum temperature: 100°C

Optional colored knobs	Standard (.62") *Prod No*	Long (1.25") *Prod No*
Green	CNVEKG	CNVEKLG
Red	CNVEKR	CNVEKLR
Blue	CNVEKU	CNVEKLU
Silver	CNVEKS	CNVEKLS
Black	CNVEKB	CNVEKLB

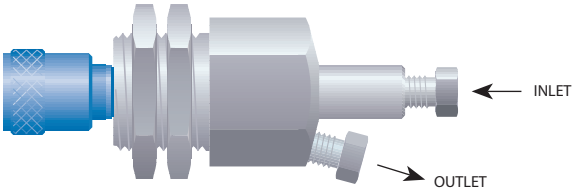

Very similar in function to the Valco combo valves, these are the original, hex-bodied combo valves made by the Condyne division of VICI Metronics for nearly 30 years. Condyne products have been transferred to the Valco Houston location, where a number of improvements have been made.

Standard construction features an anodized aluminum body with Viton O-ring seals. Maximum inlet pressure is 100 psi, with a maximum temperature of 100°C. The valve can be panel mounted through an 11/16" or 3/4" diameter hole. Valco 1/16" fittings are standard, but 1/8" fittings are also available. Nuts and ferrules are included.

Typically, the knob color is used as an indicator of the rated flow, but the standard knob can be changed if desired. A longer version of the knob is also available, as is an all brass valve (in OEM quantities). Consult the factory regarding these options.

Condyne combo valves

SPECS
Maximum inlet pressure:
100 psi
Maximum temperature:
100°C

Maximu m flow @ 40psi He or N2	*Knob color*	**1/16" Valco fittings** *Prod No*	**1/8" Valco fittings** *Prod No*
10 ml/min	Green	CVA10GS1	CVA10GS2
50 ml/min	Red	CVA50RS1	CVA50RS2
150 ml/min	Blue	CVA150US1	CVA150US2
500 ml/min	Black	CVA500BS1	CVA500BS2
1 liter/min	Yellow	CVA1KYS1	CVA1KYS2

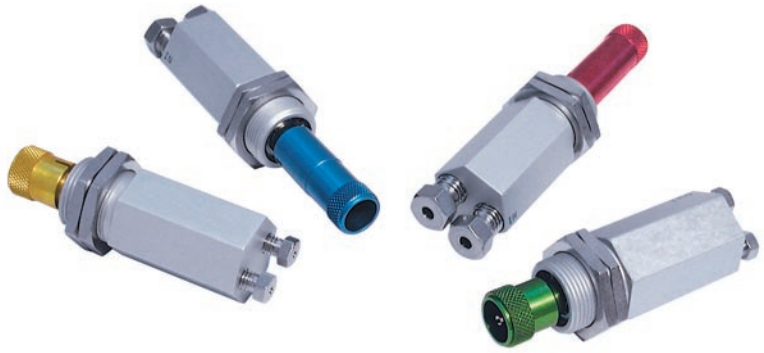

Gas Flow Controllers

Flow controllers provide a stable flow rate under varying pressure. VICI flow controllers are precision machined from aluminum or stainless bar stock to eliminate the contamination often found in die cast parts. Positive flow shut-off is provided by an integral Viton-sealed adjustment valve.

With all our flow controllers, the inlet pressure must exceed the outlet pressure by 10 psi.

Model 100 gas flow controller

Fixed span upstream referenced flow controller

The Model 100 is available in a variety of preset maximum flow rates, from 150 mL/min to 10 liters/min (N_2 at 40 psi). Any flow controller in this series can be ordered with a 10-turn Spectrol digital dial (3 or 4 digits), to permit a visual indication of the flow setting.

All flow rates listed below are based on N_2 at 40 psi inlet pressure. Maximum inlet pressure is 200 psi.

Flow rate /min	Aluminum body Viton diaphragm Prod No	Aluminum body SS diaphragm Prod No	SS body Viton diaphragm Prod No	SS body SS diaphragm Prod No
With standard control knob				
0 - 150 mL	FC10AV1K	FC10AS1K	FC10SV1K	FC10SS1K
0 - 250 mL	FC10AV2K	FC10AS2K	FC10SV2K	FC10SS2K
0 - 850 mL	FC10AV3K	FC10AS3K	FC10SV3K	FC10SS3K
0 - 1.2 L	FC10AV4K	FC10AS4K	FC10SV4K	FC10SS4K
0 - 4.5 L	FC10AV5K	FC10AS5K	FC10SV5K	FC10SS5K
0 - 10.0 L	FC10AV6K	FC10AS6K	FC10SV6K	FC10SS6K
With Spectrol 3-digit dial				
0 - 150 mL	FC10AV1S3	FC10AS1S3	FC10SV1S3	FC10SS1S3
0 - 250 mL	FC10AV2S3	FC10AS2S3	FC10SV2S3	FC10SS2S3
0 - 850 mL	FC10AV3S3	FC10AS3S3	FC10SV3S3	FC10SS3S3
0 - 1.2 L	FC10AV4S3	FC10AS4S3	FC10SV4S3	FC10SS4S3
0 - 4.5 L	FC10AV5S3	FC10AS5S3	FC10SV5S3	FC10SS5S3
0 - 10.0 L	FC10AV6S3	FC10AS6S3	FC10SV6S3	FC10SS6S3
With Spectrol 4-digit dial				
0 - 150 mL	FC10AV1S4	FC10AS1S4	FC10SV1S4	FC10SS1S4
0 - 250 mL	FC10AV2S4	FC10AS2S4	FC10SV2S4	FC10SS2S4
0 - 850 mL	FC10AV3S4	FC10AS3S4	FC10SV3S4	FC10SS3S4
0 - 1.2 L	FC10AV4S4	FC10AS4S4	FC10SV4S4	FC10SS4S4
0 - 4.5 L	FC10AV5S4	FC10AS5S4	FC10SV5S4	FC10SS5S4
0 - 10.0 L	FC10AV6S4	FC10AS6S4	FC10SV6S4	FC10SS6S4

SPECS

Preset max flow rates:
150 mL/min to 10 liters/min (N_2 at 40 psi).

Maximum inlet pressure:
200 psi

Maximum temperature:
100°C

Standard fittings:
- 1/8" external tube fittings (EAOR22)

Other fittings are available. Contact the factory for further information.

ALTERNATE FITTING TYPES

Models 100 and 300
The standard is the EAOR22 1/8" external tube fitting. Alternative fitting types are listed below. Order separately.

Internal fitting with O-ring seal	Prod No	Price
1/8" to 5/16-24	ZAOR22	$14
1/16" to 5/16-24	ZAOR12	14

Model 202
The standard 1/8" NPT female pipe thread with pipe adapters to 1/16" OD tubing included. Another adapter is listed below. Order separately.

1/8" NPT male pipe to Valco internal	Prod No	Price
1/8"	PZA22	$14

WHICH KIND OF CONTROLLER?

An **upstream-referenced** controller maintains the flow rate as long as the upstream (inlet) pressure is held constant.

A **downstream-referenced** controller maintains a constant flow under constant downstream (outlet) pressure.

Model 202 gas flow controller

Adjustable span upstream-referenced flow controller

SPECS

Flow range:
infinitely adjustable
Min: 5 mL/min
Max: 1.6 L/min
(N_2 at 40 psi)

Maximum inlet pressure:
200 psi

Maximum temperature:
100°C

Standard fittings:
- 1/8" NPT female pipe threads
- Pipe adapters to 1/16" OD tubing are included.

Other fittings are available. *(See facing page.)*

The Model 202 provides a user-variable span adjustment permitting it to be used for a variety of flow ranges. After the span is adjusted, the flow controller has a full 10 turns of resolution between the minimum and maximum flow rates. When equipped with a Spectrol digital dial, settings are reproducible to better than 1%.

	Aluminum body Viton diaphragm *Prod No*	Aluminum body SS diaphragm *Prod No*	SS body Viton diaphragm *Prod No*	SS body SS diaphragm *Prod No*
With standard control knob	FC22AV1K	FC22AS1K	FC22SV1K	FC22SS1K
With Spectrol 3-digit dial	FC22AV1S3	FC22AS1S3	FC22SV1S3	FC22SS1S3
With Spectrol 4-digit dial	FC22AV1S4	FC22AS1S4	FC22SV1S4	FC22SS1S4

Model 300 gas flow controller

Fixed span downstream-referenced flow controller

SPECS

Maximum flow rate:
1.6 L/min
with ambient downstream pressure

Maximum inlet pressure:
200 psi

Maximum temperature:
100°C

Standard fittings:
- 1/8" external tube fittings (EAOR22)

Other fittings are available. *(See facing page.)* Contact the factory for further information.

The Model 300 flow controller provides a stable flow rate when upstream pressure conditions vary, providing the downstream pressure remains constant.

All flow rates listed below are based on N_2 at 40 psi inlet pressure. Maximum inlet pressure is 200 psi.

Flow rate /min	Aluminum body Viton diaphragm *Prod No*	Aluminum body SS diaphragm *Prod No*	SS body Viton diaphragm *Prod No*	SS body SS diaphragm *Prod No*
With standard control knob				
0 - 200 mL	FC30AV1K	FC30AS1K	FC30SV1K	FC30SS1K
0 - 300 mL	FC30AV2K	FC30AS2K	FC30SV2K	FC30SS2K
0 - 800 mL	FC30AV3K	FC30AS3K	FC30SV3K	FC30SS3K
0 - 1.6 L	FC30AV4K	FC30AS4K	FC30SV4K	FC30SS4K
With Spectrol 3-digit dial				
0 - 200 mL	FC30AV1S3	FC30AS1S3	FC30SV1S3	FC30SS1S3
0 - 300 mL	FC30AV2S3	FC30AS2S3	FC30SV2S3	FC30SS2S3
0 - 800 mL	FC30AV3S3	FC30AS3S3	FC30SV3S3	FC30SS3S3
0 - 1.6 L	FC30AV4S3	FC30AS4S3	FC30SV4S3	FC30SS4S3
With Spectrol 4-digit dial				
0 - 200 mL	FC30AV1S4	FC30AS1S4	FC30SV1S4	FC30SS1S4
0 - 300 mL	FC30AV2S4	FC30AS2S4	FC30SV2S4	FC30SS2S4
0 - 800 mL	FC30AV3S4	FC30AS3S4	FC30SV3S4	FC30SS3S4
0 - 1.6 L	FC30AV4S4	FC30AS4S4	FC30SV4S4	FC30SS4S4
With screwdriver adjustable operator				
0 - 750 mL	FC31AV1			

MORE INFORMATION

Male pipe adapters
Internal..... page 38
External 39

Micrometering Valves

Micrometering (needle) valves combine the ease of connection associated with Valco zero dead volume fittings with convenient bulkhead mounting. The very low internal volume and precision design make this valve ideal for use as a gas control valve in chromatographic systems.

The Viton® model is rated at 225°C, while a version with Kalrez™ seals is capable of continuous operation at 315°C. This allows a needle valve to be mounted directly within a heated oven, facilitating control of flow switching in multidimensional systems while keeping the gases at oven temperature.

Valves are rated for maximum of 1000 psi gas. They are individually tested on a mass spectrometer leak detector to a helium leak rate specification of < 1 x 10^{-8} atm cc/sec.

An unlubricated version with a specially polished seat was designed to be used with our pulsed discharge detectors, and should be used upstream of any ultrapure gas system. There is also a 1/16" tube version.

1/16" micrometering valves *with Valco fittings*

Seal	*Lubrication*	*Prod No*
Standard: 2–225 ml/min@ 15 psi N_2 inlet		
Viton	Lubricated	ZBNV1
Viton	Non-lubricated	ZBNV1-D
Kalrez	Non-lubricated	ZBNV1-KZ
Fine control: 2–175 ml/min@ 15 psi N_2 inlet		
Viton	Lubricated	ZBNV1F
Viton	Non-lubricated	ZBNV1F-D
Kalrez	Non-lubricated	ZBNV1F-KZ
Low flow: 2–90 ml/min@ 40 psi N_2 inlet		
Viton	Lubricated	ZBNV1LF
Viton	Non-lubricated	ZBNV1LF-D
Kalrez	Non-lubricated	ZBNV1LF-KZ

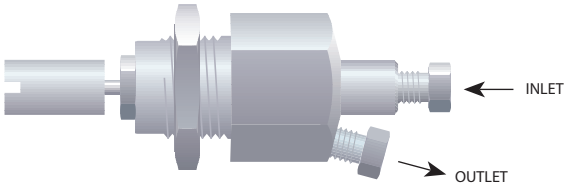

1/16" micrometering valves *with 18" tubes*

Seal	*Lubrication*	*Prod No*
Standard: 2–225 ml/min@ 15 psi N_2 inlet		
Viton	Lubricated	BNV1
Viton	Non-lubricated	BNV1-D
Kalrez	Non-lubricated	BNV1-KZ
Low flow: 2–90 ml/min@ 40 psi N_2 inlet		
Viton	Lubricated	BNV1LF
Viton	Non-lubricated	BNV1LF-D
Kalrez	Non-lubricated	BNV1LF-KZ

Combo Pressure Regulators

The VICI combo regulator is a combination regulator and shut-off valve. The pressure is set using the screwdriver adjustment in the center of the on/off knob. Turning the knob counterclockwise provides positive shutoff, while clockwise rotation restores gas pressure to within 0.05 psi of the setpoint.

The regulator is machined from aluminum bar stock and then hard-anodized to provide contamination-free service. It features a stainless steel diaphragm and Viton®-sealed stainless poppet. The compact size (3" x 1.125" diameter) saves panel space and permits installation anywhere that an 11/16" hole can be located. Mounting hardware is supplied.

Available with outlet pressure ranges of 0-15 psi, 0-30 psi, or 0-60 psi, these regulators can be ordered with 1/16" or 1/8" Valco internal fittings or 1/8" external fittings. Other configurations are available in OEM quantities.

Maximum operating temperature is 100°C, and maximum supply pressure is 250 psig. The influence of supply pressure on outlet pressure is less than 0.1 psi per 10 psi change in supply pressure.

Combo pressure regulators

SPECS

Maximum inlet pressure:
250 psi

Maximum temperature:
100°C

Wetted materials:
- Anodized aluminum
- Stainless steel
- Viton

	Valco internal fittings 1/16"	Valco internal fittings 1/8"	External fittings 1/8"
Pressure range:	*Prod No*	*Prod No*	*Prod No*
0-15 psi	PR50A15Z1	PR50A15Z2	PR50A15E2
0-30 psi	PR50A30Z1	PR50A30Z2	PR50A30E2
0-60 psi	PR50A60Z1	PR50A60Z2	PR50A60E2

ADAPTERS USED FOR VALCO AND CONDYNE CONTROL DEVICES

Prod No	*Price*	*Used for*	*Description*
ZAOR11	$14	Diaphragm valve; optional on on/off valves	Valco 1/16" internal to 10-32 female
ZAOR12	14	Optional for Model 100 and 300 flow controllers	Valco 1/16" internal to 5/16-24 O-ring seal
ZAOR22	14	Optional for Model 100 and 300 flow controllers	Valco 1/8" internal to 5/16-24 O-ring seal
EAOR21	14	Air actuated prime/purge and on/off valves	External 1/8" to 10-32 O-ring seal
EAOR22	14	Standard on Model 100 and 300 flow controllers	External 1/8" to 5/16-24 O-ring seal